MA0513 (12 VDC)

- 12 VDC
- Dynamic loads up to 500N (112 lb)
- Static load capacity of 2000N (450 lb)
- Maximum travel speed of 13 mm/sec (31 in/min)
- 25% duty cycle
- Clevis-to-clevis mounting
- Self-locking
- Preset limit switches (non-adjustable)
- Potentiometer
- IP65 protection rating
- Aluminum extension tube and outer tube
- Optional DC controls (see back cover)

MA0513 Multipurpose Actuators (12 VDC)

Part Number	Capacity N (lb)	Stroke mm (in)	Travel Speed mm/sec (in/min)	Retracted (A) mm (in)
MA0513B1110	**500** (112)	**100** (3.9)	**13** (31)	**246** (9.7)
MA0513B1115	**500** (112)	**150** (5.9)	**13** (31)	**297** (11.7)
MA0513B1125	**500** (112)	**250** (9.8)	**13** (31)	**399** (15.7)
MA0513B1130	**500** (112)	**300** (11.8)	**13** (31)	**450** (17.7)

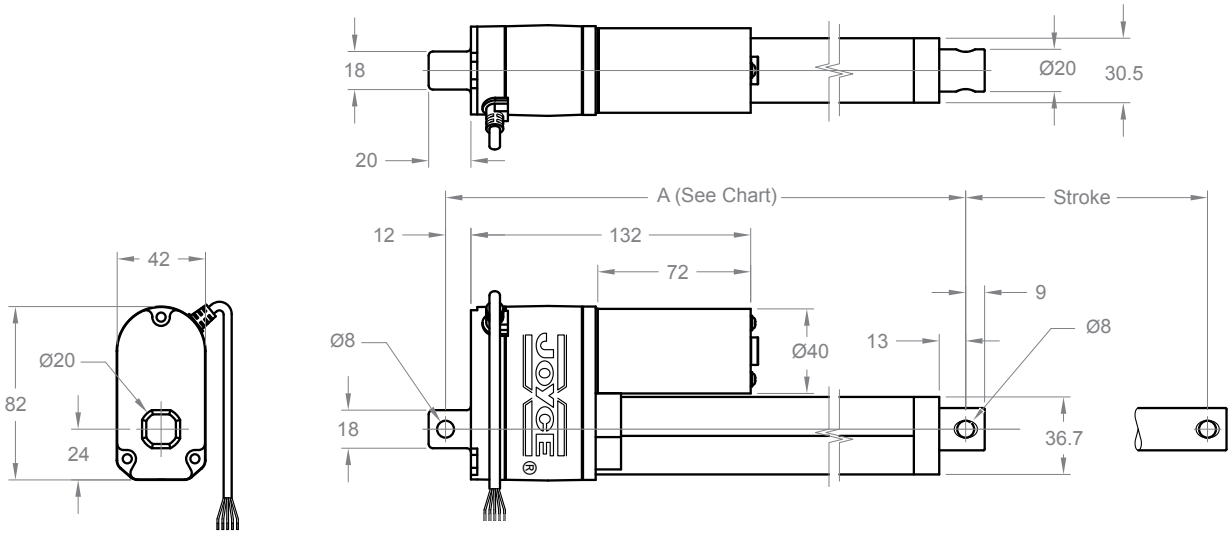

All dimensions are in millimeters.

Potentiometer

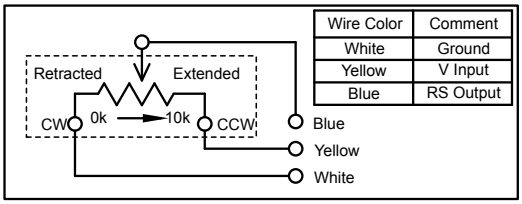

Wire Color	Comment
White	Ground
Yellow	V Input
Blue	RS Output

Motor 12 VDC

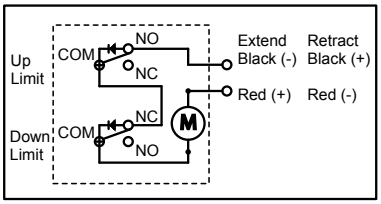

MA0513 (12 VDC) Speed vs Load

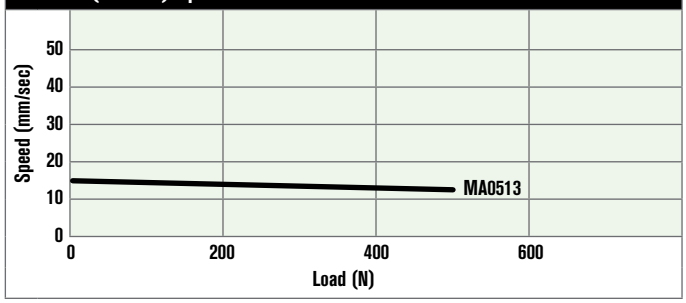

MA0513 (12 VDC) Current vs Load

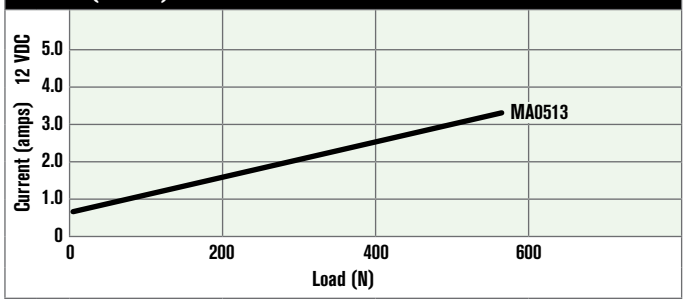

Chart values based on 18°C (64°F).