MA2547/MA3527/MA4514/MA7007 (12 VDC)

- 12 VDC
- Dynamic loads up to 7000N (1574 lb)
- Static load capacity of 13,600N (3057 lb)
- Maximum travel speeds (see chart)
- 25% duty cycle
- Clevis-to-clevis mounting
- Self-locking
- Preset limit switches can be adjusted
- Potentiometer
- IP65 protection rating
- Stainless steel extension tube, steel outer tube
- Optional DC controls (see back cover)

MA2547 / MA3527 / MA4514 / MA7007 Multipurpose Actuators (12 VDC)

Part Number	Capacity N (lb)	Stroke mm (in)	Travel Speed mm/sec (in/min)	Retracted (A) mm (in)
MA2547B1115	2500 (562)	153 (6.0)	47 (111)	450 (17.7)
MA2547B1130	2500 (562)	305 (12.0)	47 (111)	680 (26.8)
MA2547B1145	2500 (562)	457 (18.0)	47 (111)	832 (32.8)
MA3527B1115	3500 (787)	153 (6.0)	27 (64)	450 (17.7)
MA3527B1130	3500 (787)	305 (12.0)	27 (64)	680 (26.8)
MA3527B1145	3500 (787)	457 (18.0)	27 (64)	832 (32.8)
MA4514B1115	4500 (1012)	153 (6.0)	14 (33)	450 (17.7)
MA4514B1130	4500 (1012)	305 (12.0)	14 (33)	680 (26.8)
MA4514B1145	4500 (1012)	457 (18.0)	14 (33)	832 (32.8)
MA7007B1115	7000 (1574)	153 (6.0)	7 (17)	450 (17.7)
MA7007B1130	7000 (1574)	305 (12.0)	7 (17)	680 (26.8)
MA7007B1145	7000 (1574)	457 (18.0)	7 (17)	832 (32.8)
MA7007B1160	7000 (1574)	610 (24.0)	7 (17)	985 (38.8)

Refer to MA1527 / MA3507 (12 VDC) for photo.

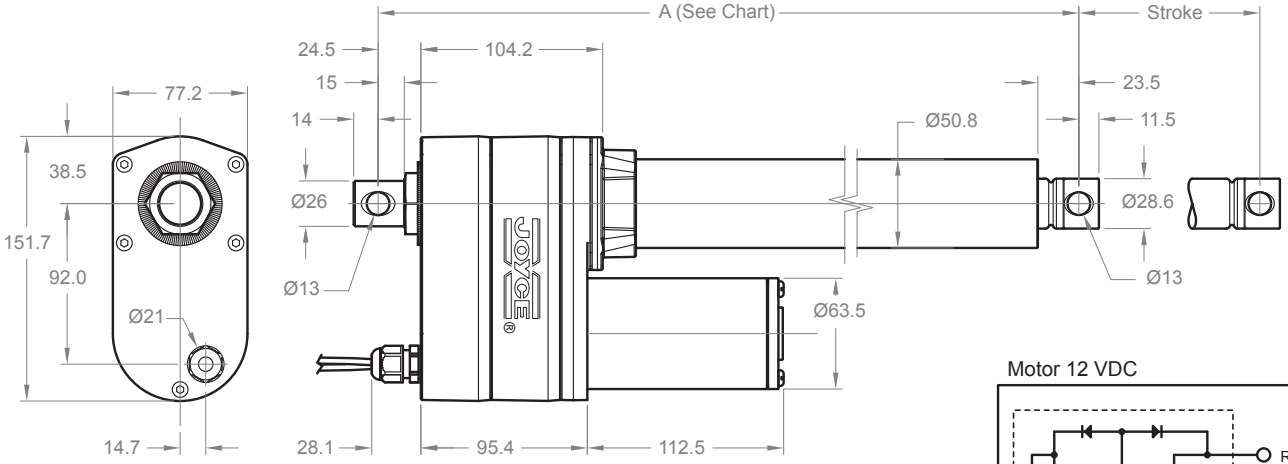

All dimensions are in millimeters.

Potentiometer

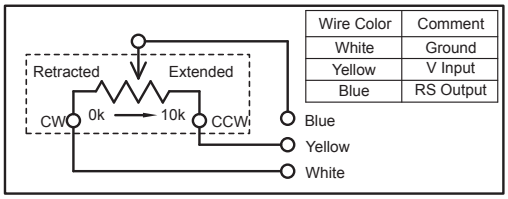

Wire Color	Comment
White	Ground
Yellow	V Input
Blue	RS Output

Motor 12 VDC

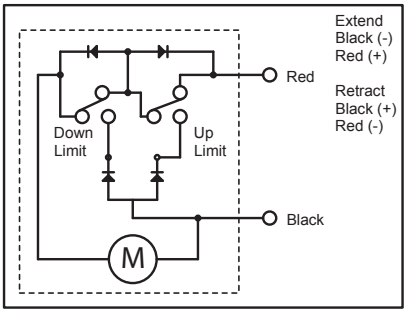

MA2547 / MA3527 / MA4514 / MA7007 (12 VDC) Speed vs Load

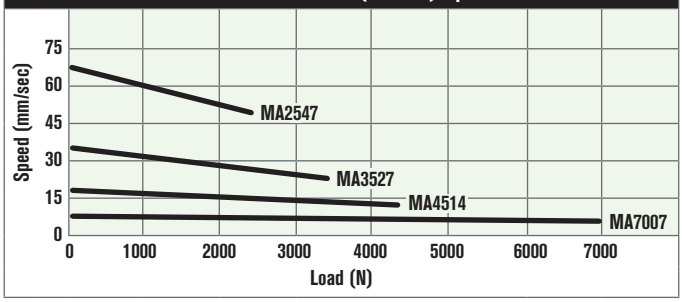

MA2547 / MA3527 / MA4514 / MA7007 (12 VDC) Current vs Load

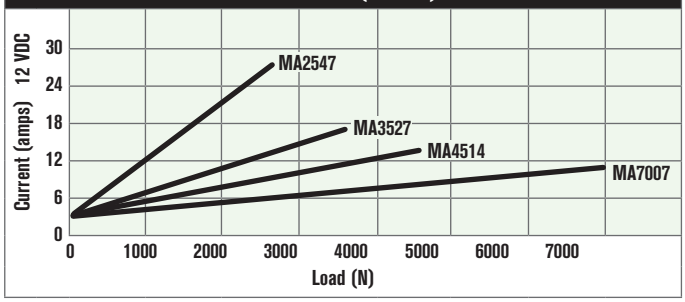

Chart values based on 18°C (64°F).