Joyce 3.000" Dia. x .660 Lead Ball Screw with Standard Capacity Ball Nut

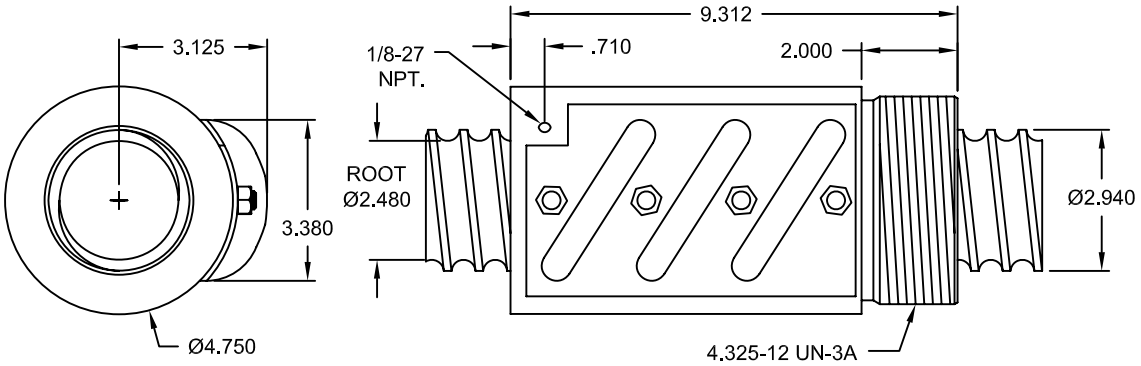

Ball Screw # BS300R066A
Ball Nut # BN300R066S

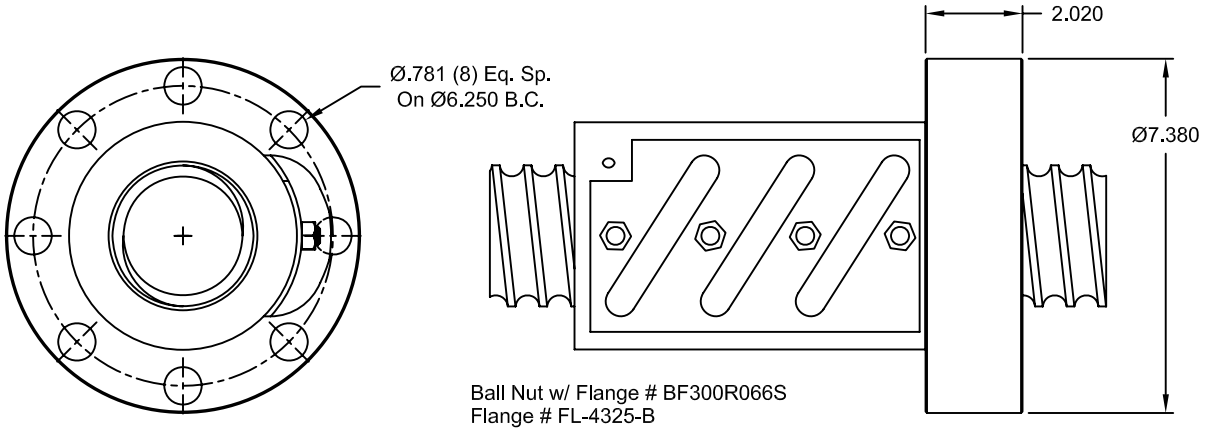

Ball Nut w/ Flange # BF300R066S
Flange # FL-4325-B

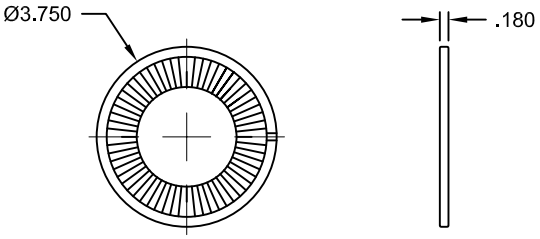

Wiper Kit # WK-80
Secured In Ball Nut With Snap Rings