MACHINE SCREW ComDRIVEs®

Joyce machine screw ComDRIVEs® combine a machine screw jack, motor and gear reducer into a single compact unit. ComDRIVEs are available in 2-ton through 30-ton capacities. They provide travel speeds up to 35.1 inches per minute. ComDRIVEs with single lead screws (CD) are self-locking; those with double lead screws (DCD) may require a brake motor or external locking device to hold position.

Four standard end conditions are available and ComDRIVEs can be fitted with protective boots. Limit switches, anti-backlash devices, and other options are also available.

ComDRIVE Benefits:

- Can power an entire jacking system.
- Reduces the number of components that must be specified.
- Simplifies design.
- Reduces installation costs with only a single plate needed to mount the jack body.
- Reduces the number of couplings and shafts required in multi-jack systems.
- Standard 230/460 volt, 3-phase, 60 hertz motor included.

ComDRIVEs can be specified without the motor. The reducer flange accepts standard NEMA motor frame sizes.

Joyce can customize ComDRIVEs to meet your specifications. Ask about larger size ComDRIVEs.

Joyce offers Machine Screw ComDRIVEs in several designs including:

- **Translating**
- **Keyed for non-rotation**
- **Keyed for traveling nut (KFTN)**
- **Double clevis**
- **Trunnion mount**

A guide for ordering is on pages 46 and 47.

Scan the QR Code to view this product on our website.

MACHINE SCREW ComDRIVEs® ORDERING INFORMATION

Instructions: Select a model number from this chart.

2-Ton	3-Ton	5-Ton	10-Ton	15-Ton	20-Ton	25-Ton	30-Ton
CD62 CD122 CD242	CD63 CD123 CD243	CD65 CD125 CD245	CD810 CD2410	CD815 CD2415	CD820 CD2420	CD1125 CD3225	CD1130 CD3230
DCD62* DCD122* DCD242*	DCD63* DCD123* DCD243*	DCD65* DCD125* DCD245*	DCD810* DCD2410*	DCD815* DCD2415*	DCD820* DCD2420*	DCD1125* DCD3225*	DCD1130* DCD3230*

Important Note: *Not self-locking, may lower under load. Brake motors or external locking systems are recommended.

DCD: Double lead screw.

(For 25:1 ratio contact Joyce.)

Sample Part Number: CD65U2S-18.50-P1AB-STDX-B

Jack Configuration

U=Upright

I=Inverted

End Conditions

1=T1
(plain end)

2=T2
(load pad)

3=T3
(threaded end)

4=T4
(male clevis)

Left Side Shaft Code

(see below)

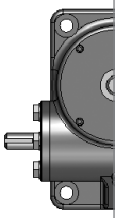

XXXX=Remove
STDX=Standard
CUST=Custom

For optional shaft codes, see page 47.

Right Side Shaft Code

(see below)

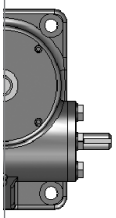

XXXX=Remove
STDX=Standard
CUST=Custom

For optional shaft codes, see page 47.

ComDRIVE® Rise

Rise is travel expressed in inches and not the actual screw length.

When companion jacks are ordered with the ComDRIVE®, their screws are lengthened to match the ComDRIVE®.

Additional Options*

X=Standard Jack, no additional options

S=Additional Specification Required (comment as necessary)

Anti-Backlash p. 177

A=Split Nut
A90=A90 Design
A95=A95 Design

Protective Boots pp. 166-169
B=Protective Boot
D=Dual Protective Boot

Finishes p. 178
F1=Do Not Paint
F2=Epoxy Paint
F3=Outdoor Paint Process

Motor Options
M1=Less Motor
M2=Brake Motor
M3=Single Phase Motor (120VAC)
M4=50Hz Motor
M5=Special Motor

Grease/Seals
H1=High Temperature Operation
H2=Food Grade

Screw Stops
Extending and retracting stops are standard on ComDRIVEs.

* Specify as many options as needed

Jack Designs

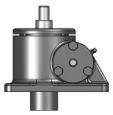

S=Translating

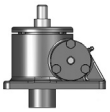

K=Keyed for Non Rotation

N=Traveling Nut

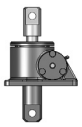

D=Double Clevis

A=KFTN Trunnion*
T=Trunnion*

*Standard trunnion mounts available on 2-ton through 20-ton jacks. (See page 179)

MACHINE SCREW ComDRIVEs® SHAFT CODES

Instructions: Select the appropriate shaft codes for both right and left hand shafts. One shaft code must be specified for each side of the ComDRIVE®.

Screw Stops (p. 10) and Boots (pp. 166-169)

Extending and retracting screw stops are standard on ComDRIVEs. When boots are added to ComDRIVEs, the closed height of the unit may be increased.

Mechanical Counters (p. 176)

CNT0=0.001" Increments

Note: Contact Joyce for availability and options.

Geared Potentiometers (p. 171)

POTA=0-10V

POTB=4-20mA

POTC=0-10V w/2 switches

POTD=4-20mA w/2 switches

IP65 rated enclosures

Encoders (pp. 172-173)

ENCA=Absolute Encoder 0-10 VDC, programmable
ENCB=Absolute Encoder 4-20mA, programmable
ENCC=Absolute Encoder CAN Open
ENCD=Absolute Encoder SSI
ENCS=Stainless Steel Incremental Encoder 1024 PPR
ENCX=Incremental Encoder 200 PPR
ENCY=Incremental Encoder 1024 PPR

ComDRIVE Reducers (pp. 49-57)

Ordering Example: P2AC

Motor code from chart at right

Mounting Positions

Code	P1	P2	P3	P4
Left Side Shaft Options		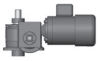		
Right Side Shaft Options				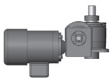

Ratio

5:1 Code A
7.5:1 Code B
10:1 Code C
15:1 Code D
Special Ratio Code X

Motors

Size	Code
1/4 HP	K
1/3 HP	A
1/2 HP	B
3/4 HP	C
1 HP	D
1-1/2 HP	E
2 HP	F
3 HP	L
5 HP	G
7-1/2 HP	H
10 HP	I
15 HP	J

All standard motors are 3-phase, 208-230/460 VAC or 230/460 VAC. Other motor options are available including international voltages, and single phase AC. Specify the appropriate motor size from the chart above. Refer to the "Additional Options" chart on the preceding page as needed. Brake motors are required for ball screw ComDRIVEs®. Contact Joyce for options that are not listed.

Mechanical Limit Switches (p. 170)

Ordering Example: LA13

Models

Model	Code
LS7-402	LI
LS8-402	LA
LS8-404	LB

Number of DPDT Switches (see p. 170)

NOTE: Will always be 0 for LS7 models

Available Positions

	1	2*	3	4	5	6*	7	8
Left Side Shaft Options								
Right Side Shaft Options								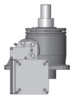

- 2, 3, 5, 10, 15, and 20 ton ComDRIVEs are available with positions #1, #3, and #5.
- 25 and 30 ton ComDRIVEs are available with positions #1, #4, #7 and #8.

* These positions are not standard. Contact Joyce with your requirements.

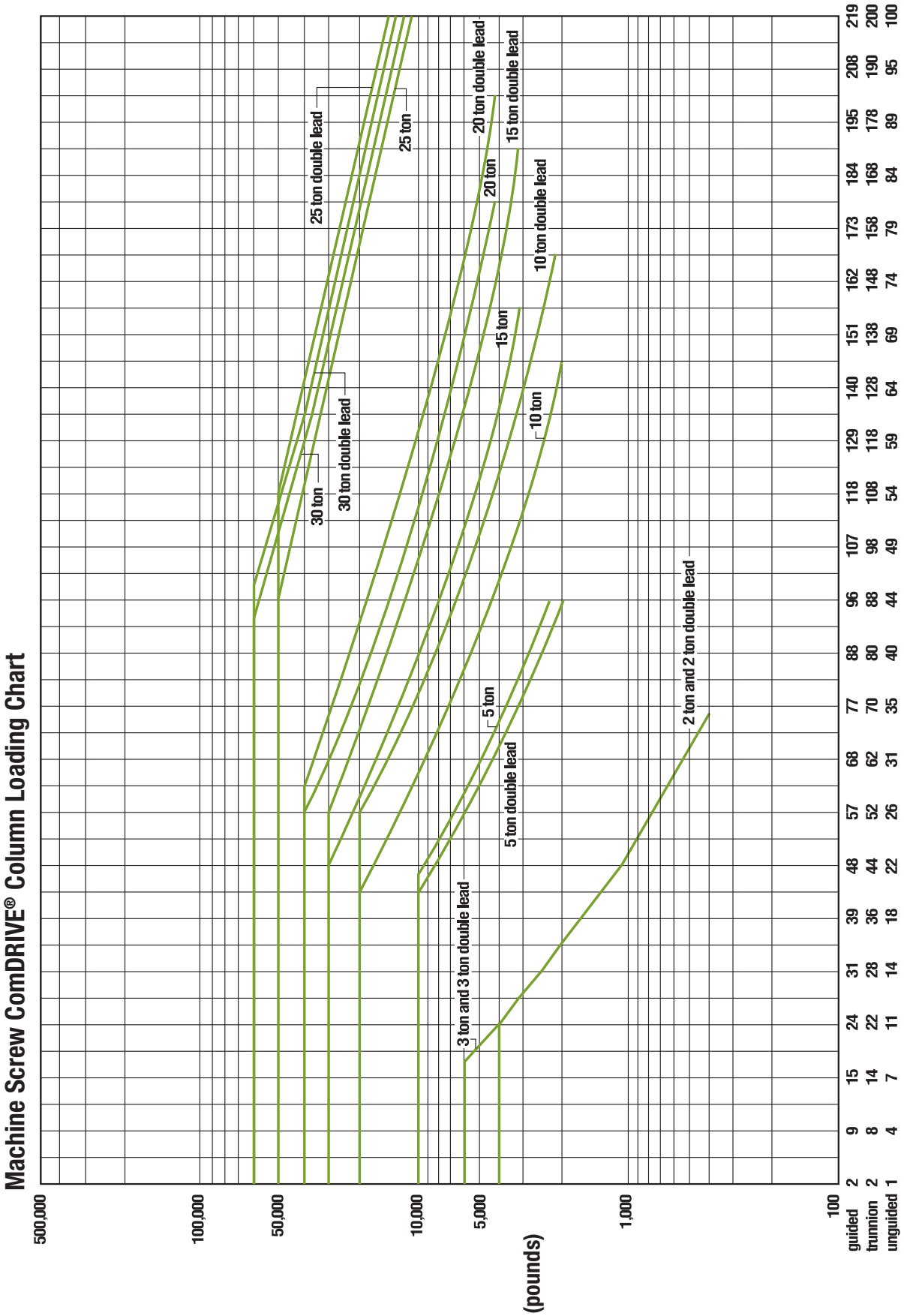

This chart includes a 2:1 Factor-of-Safety based on the Euler-Johnson equation for column loading (Oberg, Erik et al: Machinery's Handbook, 24th Edition. c. 1992 Industrial Press Inc.)
The horizontal portion of each line represents the jack's maximum dynamic capacity. Under static conditions, these lines can be exceeded. Please contact factory for assistance.

2D and 3D models available on website • Ordering information on pages 46 and 47

joycedayton.com sales@joycedayton.com 937-294-6261

MACHINE SCREW ComDRIVEs® SPECIFICATIONS

2 Ton Model Number		CD62			CD122		CD242			DCD62			DCD122	DCD242		
Reducer Ratio		5	7 1/2	10	5	7 1/2	5	7 1/2	10	5	7 1/2	10	7 1/2	5	7 1/2	10
Travel Speed IPM		13.88	9.50	7.04	6.94	4.75	3.47	2.38	1.76	27.75	19.00	14.08	9.50	6.94	4.75	3.52
Lifting Capacity, Lbs.	1/3 HP	1,865	2,650	3,500	3,350	4,000	4,000	4,000	4,000	1,300	1,850	2,450	3,300	3,830	4,000	4,000
	1/2 HP	2,875	4,000	4,000	4,000					2,000	2,825	3,720	4,000	4,000		
	3/4 HP	4,000								3,060	4,000					

3 Ton Model Number		CD63			CD123		CD243			DCD63			DCD123	DCD243		
Reducer Ratio		5	7 1/2	10	5	7 1/2	5	7 1/2	10	5	7 1/2	10	7 1/2	5	7 1/2	10
Travel Speed IPM		13.88	9.50	7.04	6.94	4.75	3.47	2.38	1.76	27.75	19.00	14.08	9.50	6.94	4.75	3.52
Lifting Capacity, Lbs.	1/3 HP	1,910	2,700	3,555	3,425	4,790	5,610	6,000	6,000	1,335	1,890	2,485	3,350	3,925	5,415	6,000
	1/2 HP	2,920	4,095	5,380	5,235	6,000	6,000			2,045	2,865	3,765	5,085	6,000	6,000	
	3/4 HP	4,430	6,000		6,000					3,100	4,340		6,000			

5 Ton Model Number		CD65		CD125	CD245	DCD65		DCD125	DCD245
Reducer Ratio		5	10	10	10	5	10	10	10
Travel Speed IPM		20.81	10.56	5.28	2.64	27.75	14.08	7.04	3.52
Lifting Capacity, Lbs.	1 HP	3,760	6,980	10,000	10,000	3,320	6,170	10,000	10,000
	1 1/2 HP	5,755				5,085			
	2 HP	7,750				6,845			

10 Ton Model Number		CD810		CD2410		DCD810		DCD2410	
Reducer Ratio		5	10	5	10	5	10	5	10
Travel Speed IPM		20.81	10.56	6.94	3.52	27.76	14.09	9.25	4.69
Lifting Capacity, Lbs.	1 HP	3,680	7,070	9,000	16,760	3,150	6,045	7,700	14,330
	1 1/2 HP	5,760		14,090		4,925		12,050	
	2 HP	7,840		19,165		6,700		16,390	
	3 HP	12,150	20,000	20,000	20,000	10,385	19,450	20,000	20,000
	5 HP								

15 Ton Model Number		CD815		CD2415		DCD815		DCD2415	
Reducer Ratio		5	10	5	10	5	10	5	10
Travel Speed IPM		20.81	10.56	6.94	3.52	27.76	14.09	9.25	4.69
Lifting Capacity, Lbs.	1 HP	3,140	6,200	7,535	14,385	2,715	5,365	6,515	12,440
	1 1/2 HP	5,035		12,085		4,350		10,450	
	2 HP	6,925		16,620		5,990		14,375	
	3 HP	10,850	20,425	26,040	30,000	9,380	17,665	22,520	30,000
	5 HP	18,515		30,000		16,010		30,000	

20 Ton Model Number		CD820		CD2420		DCD820		DCD2420	
Reducer Ratio		5	10	5	10	5	10	5	10
Travel Speed IPM		20.81	10.56	6.94	3.52	27.76	14.09	9.25	4.69
Lifting Capacity, Lbs.	1 HP	2,715	5,570	6,520	12,920	2,265	4,645	5,435	10,765
	1 1/2 HP	4,475		10,745		3,730		8,960	
	2 HP	6,235		14,965		5,195		12,475	
	3 HP	9,880	18,785	23,715	40,000	8,235	15,660	19,770	36,300
	5 HP	17,000		40,000		14,175		34,020	

25 Ton Model Number		CD1125		CD3225		DCD1125		DCD3225	
Reducer Ratio		5	10	5	10	5	10	5	10
Travel Speed IPM		20.79	10.55	6.93	3.52	35.12	17.82	11.71	5.94
Lifting Capacity, Lbs.	3 HP	9,050	17,165	20,390	36,800	7,385	14,000	16,640	30,040
	5 HP	15,700	29,420	35,390	50,000	12,815	24,010	28,885	50,000
	7 1/2 HP	23,930	45,755	50,000		19,530	37,340	44,010	
	10 HP	32,625	50,000			26,625	50,000	50,000	
	15 HP	49,410				40,325			

30 Ton Model Number		CD1130		CD3230		DCD1130		DCD3230	
Reducer Ratio		5	10	5	10	5	10	5	10
Travel Speed IPM		20.82	10.57	6.94	3.52	35.12	17.82	11.71	5.94
Lifting Capacity, Lbs.	3 HP	9,435	17,540	21,260	37,620	7,535	14,000	16,975	30,040
	5 HP	16,100	29,815	36,280	60,000	12,885	23,810	28,970	51,060
	7 1/2 HP	24,335	46,170	54,840		19,430	36,870	43,790	60,000
	10 HP	33,040	60,000	60,000		26,385	49,300	59,460	
	15 HP	49,845				39,800		60,000	

Important Note: DCD models may lower under load. Brake motors or external locking systems are recommended.

MACHINE SCREW ComDRIVEs®

2 TON - 1" SCREW

CD 62 / DCD 62
CD 122 / DCD 122
CD 242 / DCD 242

Upright

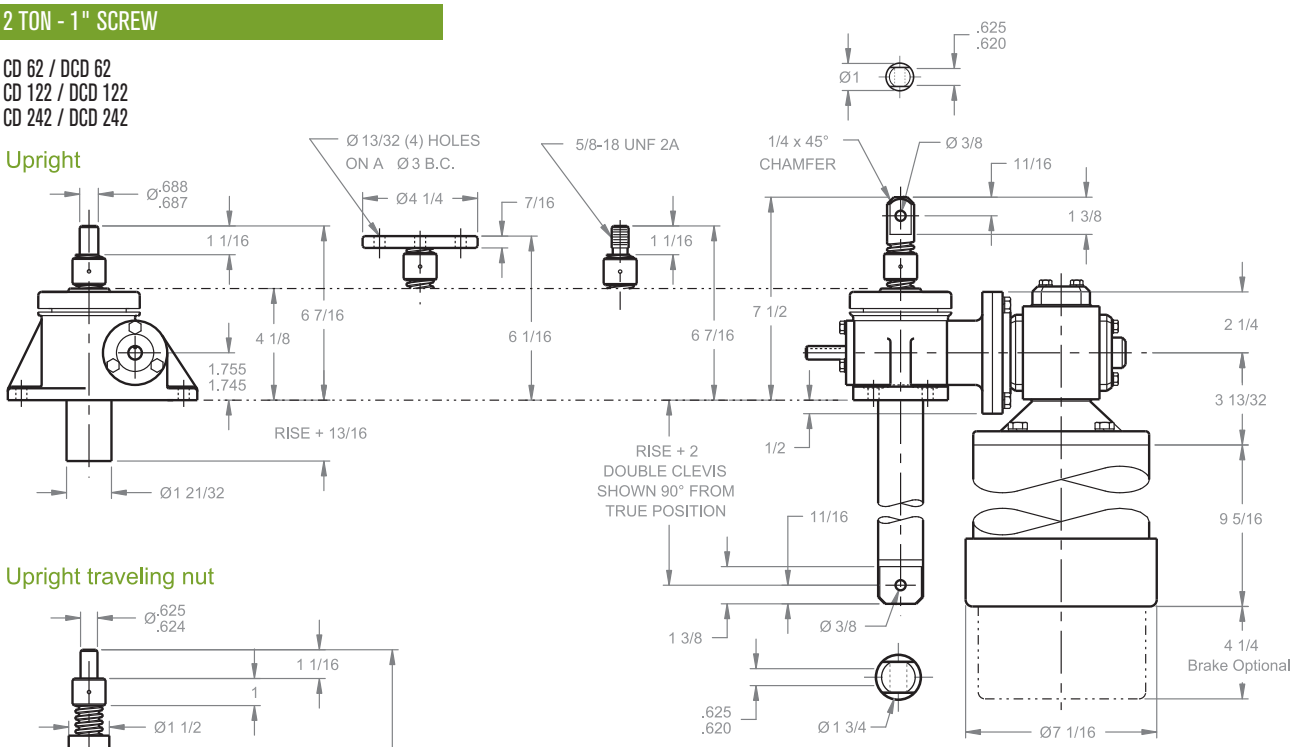

Upright traveling nut

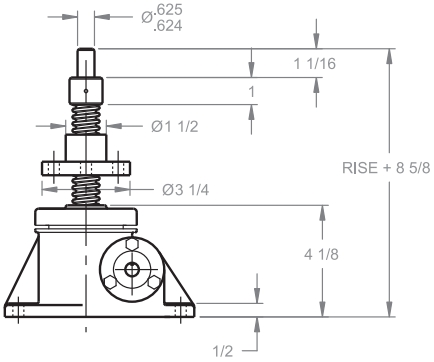

Typical Plan View

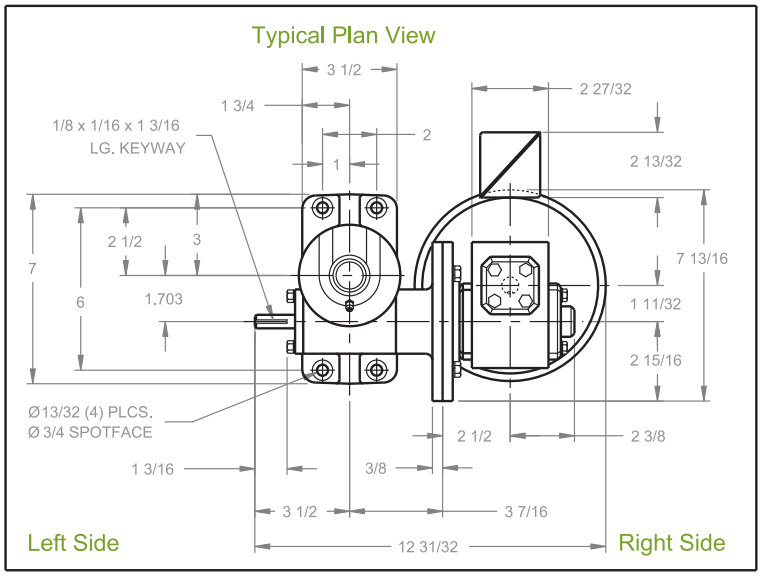

Inverted traveling nut

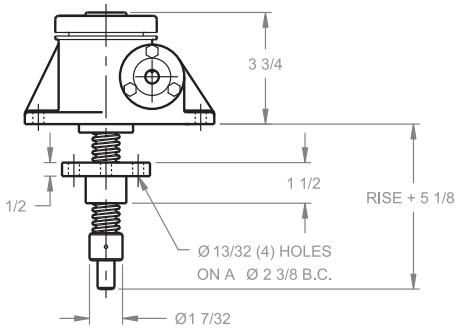

Inverted

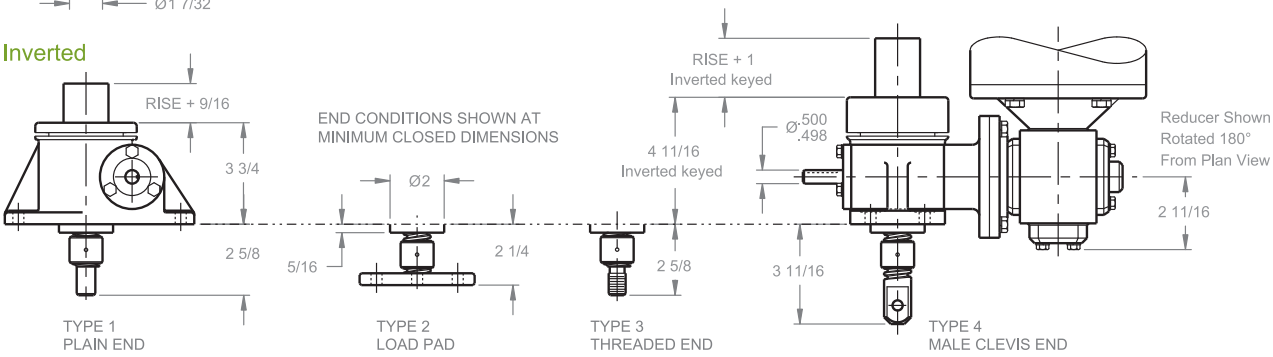

NOTE: FOR LIFTING CAPACITIES SEE PAGE 49

Note: Drawings are artist's conception — not for certification; dimensions are subject to change without notice.

MACHINE SCREW ComDRIVEs®

3 TON - 1" SCREW

CD 63 / DCD 63
CD 123 / DCD 123
CD 243 / DCD 243

Upright

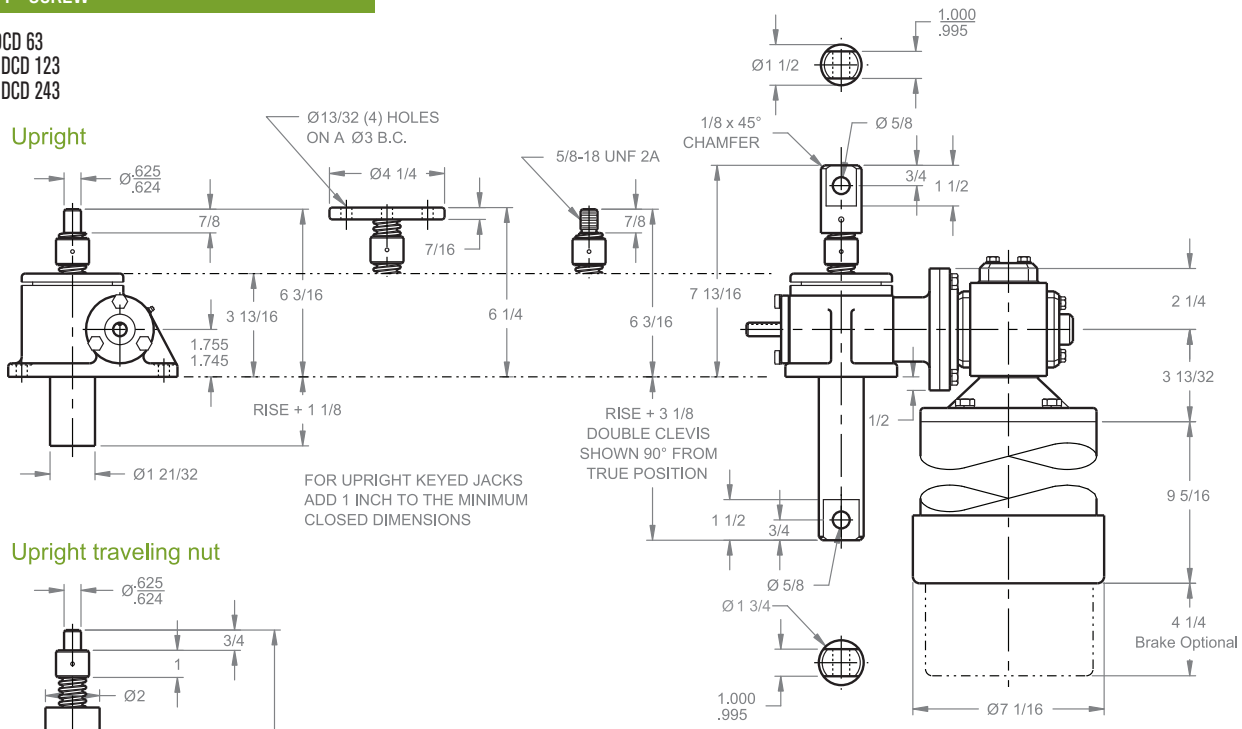

Upright traveling nut

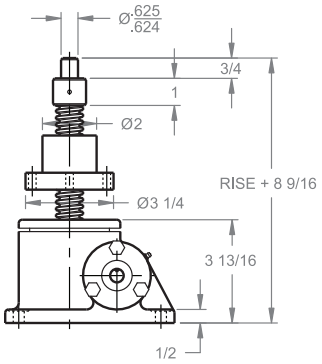

Inverted traveling nut

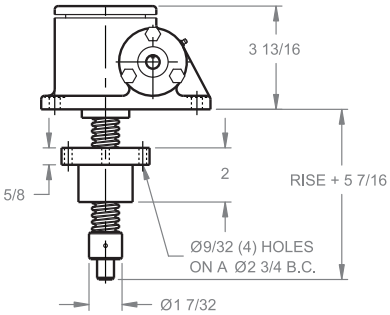

Typical Plan View

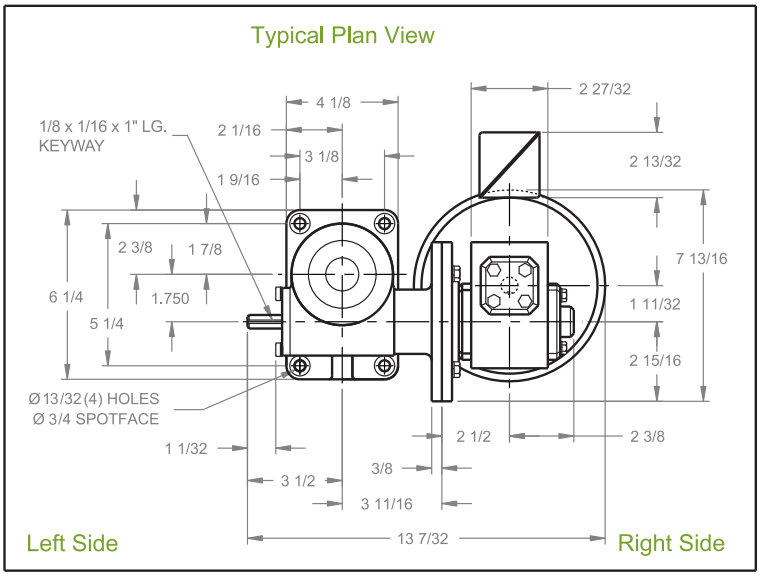

Inverted

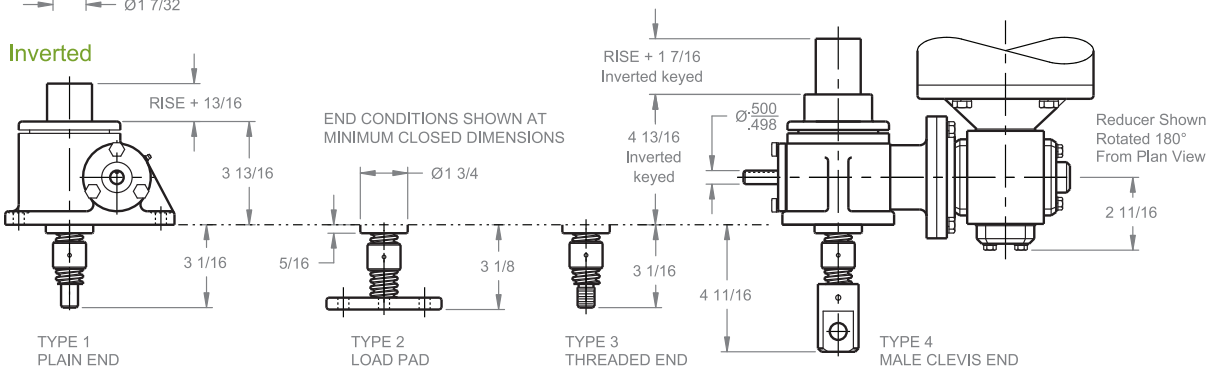

NOTE: FOR LIFTING CAPACITIES SEE PAGE 49

Note: Drawings are artist's conception — not for certification; dimensions are subject to change without notice.

MACHINE SCREW ComDRIVEs®

5 TON - 1 1/2" SCREW

CD 65 / DCD 65
CD 125 / DCD 125
CD 245 / DCD 245

Upright

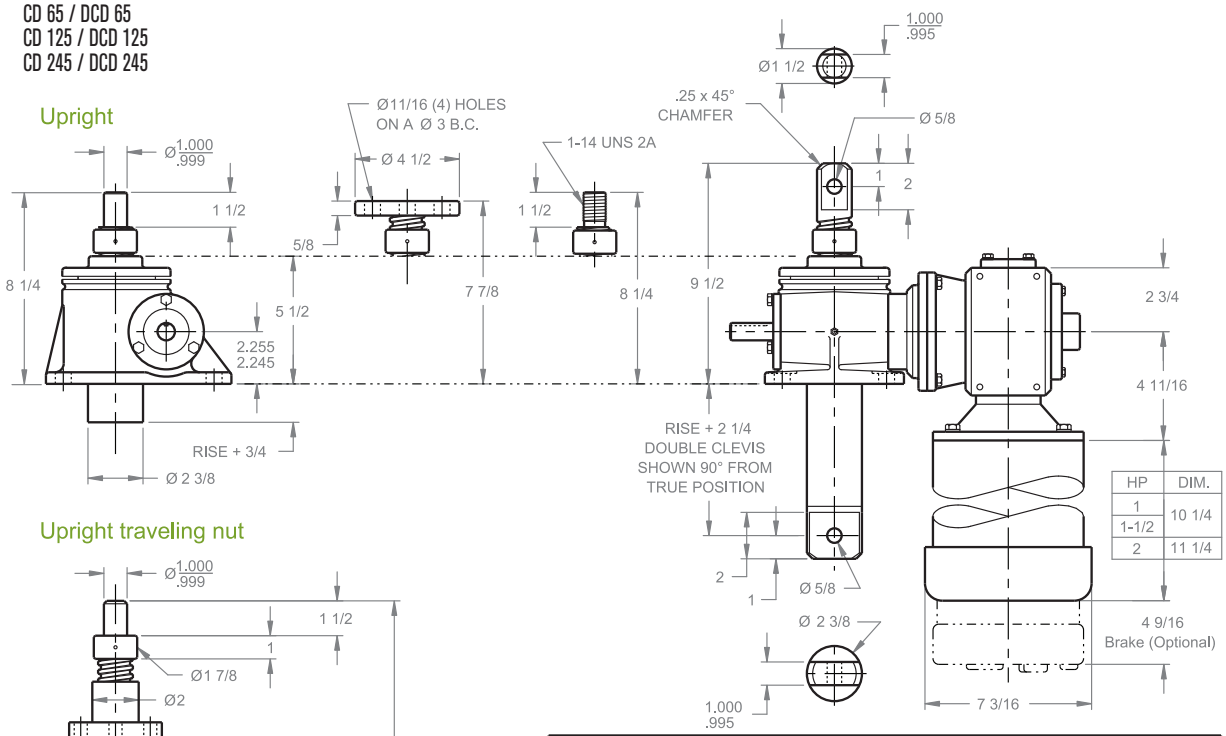

HP	DIM.
1	10 1/4
1-1/2	
2	11 1/4

Upright traveling nut

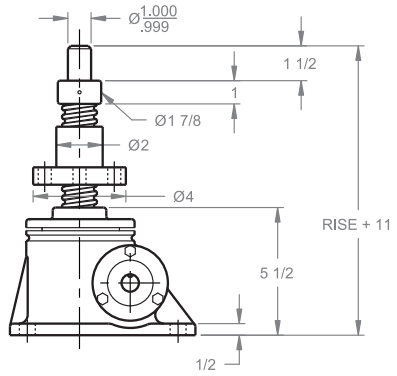

Inverted traveling nut

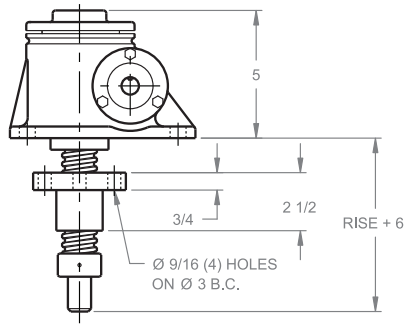

Typical Plan View

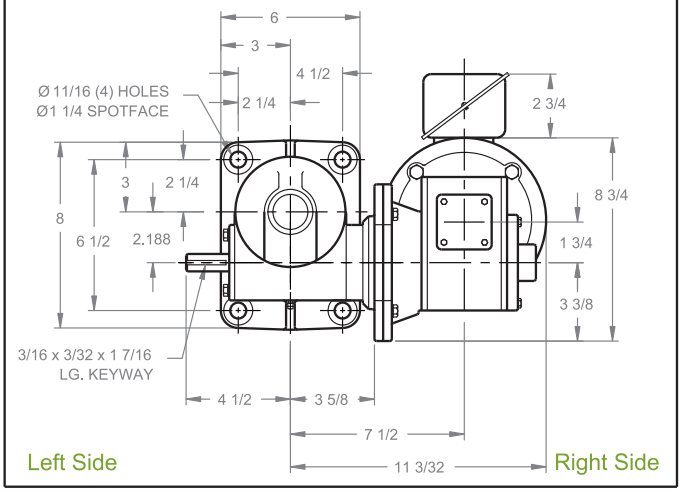

Inverted

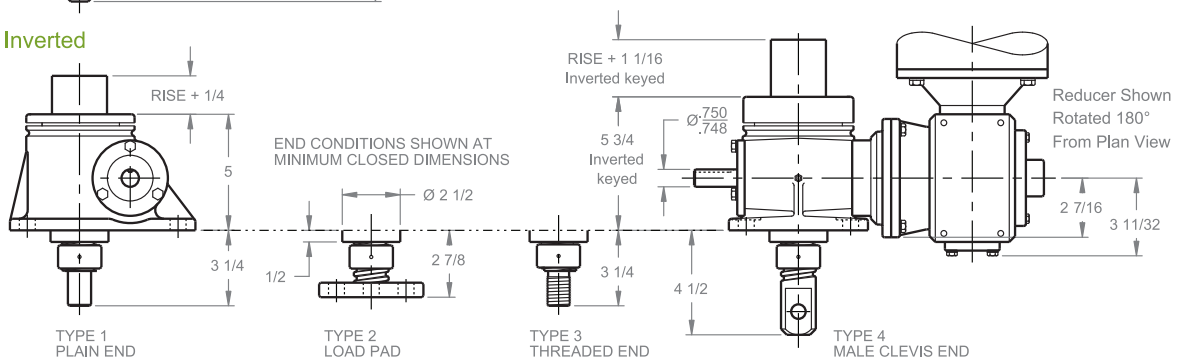

NOTE: FOR LIFTING CAPACITIES SEE PAGE 49

Note: Drawings are artist's conception — not for certification; dimensions are subject to change without notice.

MACHINE SCREW ComDRIVEs®

10 TON - 2" SCREW

CD 810 / DCD 810
CD 2410 / DCD 2410

Upright

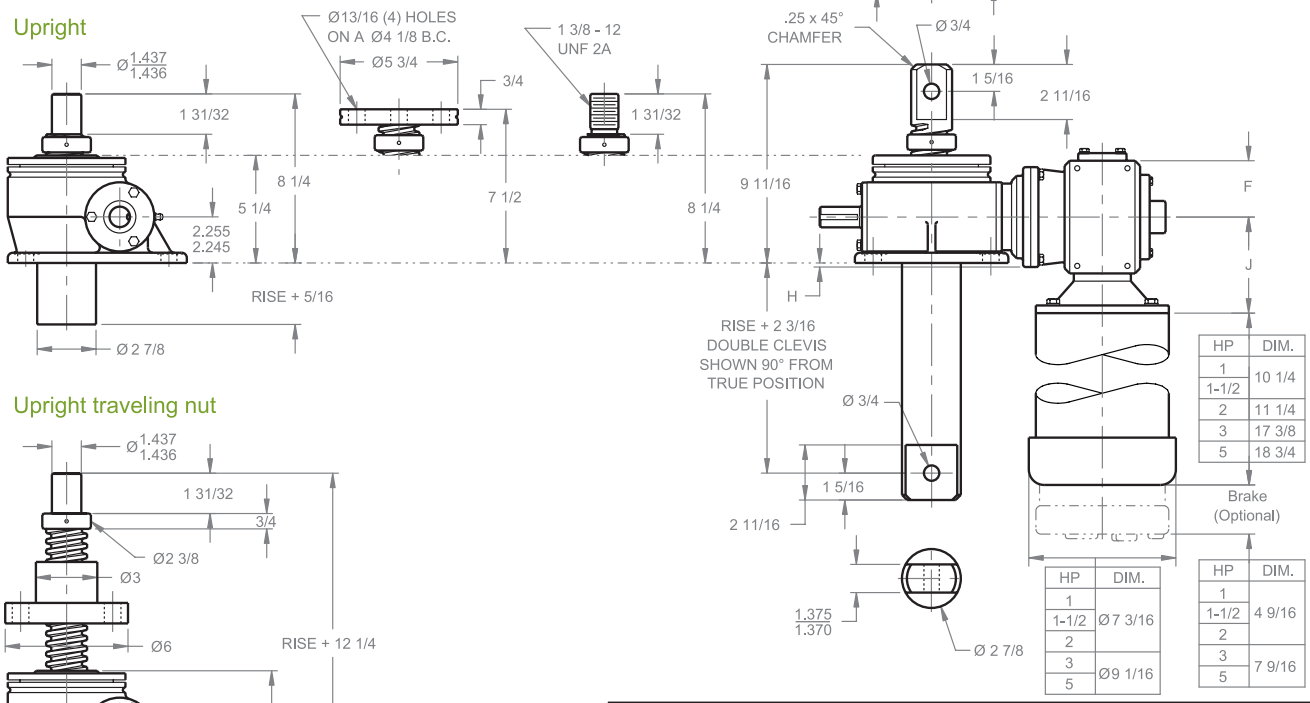

HP	DIM.
1	10 1/4
1-1/2	
2	11 1/4
3	17 3/8
5	18 3/4

HP	DIM.
1	Ø7 3/16
1-1/2	
2	
3	Ø9 1/16
5	

HP	DIM.
1	4 9/16
1-1/2	
2	
3	7 9/16
5	

Upright traveling nut

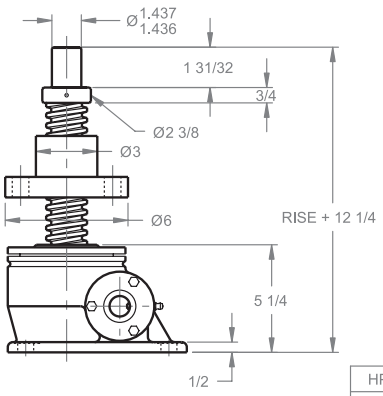

Inverted traveling nut

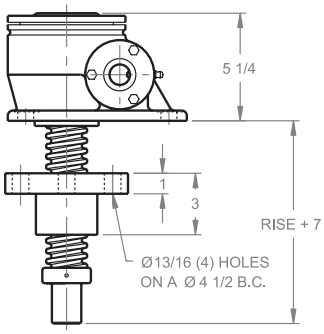

REDUCER DIMENSIONS

HP	1, 1 1/2, 2	3, 5
A	8 11/32	8 29/32
B	11 21/32	13 17/32
C	1 3/4	2 5/8
D	3 3/8	4 7/16
E	8 7/16	11 11/16
F	2 3/4	3 7/8
G	4 15/32	4 15/32
H	3/16	1 5/8
J	4 11/16	5 3/4
K	3 11/32	4 5/16

Typical Plan View

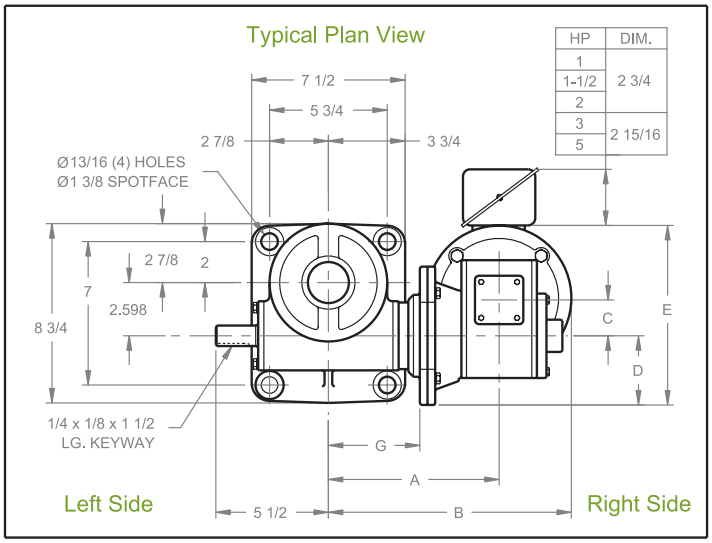

HP	DIM.
1	2 3/4
1-1/2	
2	
3	2 15/16
5	

Inverted

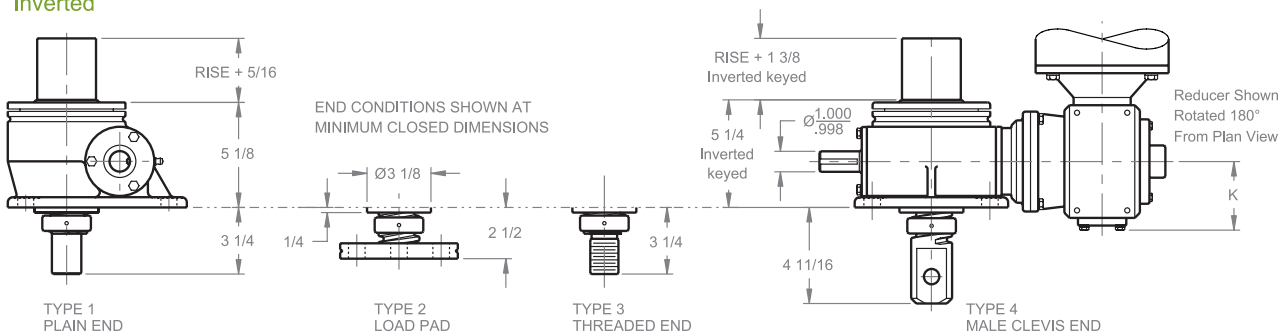

NOTE: FOR LIFTING CAPACITIES SEE PAGE 49

Note: Drawings are artist's conception — not for certification; dimensions are subject to change without notice.

MACHINE SCREW ComDRIVEs®

15 TON - 2 1/4" SCREW

CD 815 / DCD 815
CD 2415 / DCD 2415

Upright

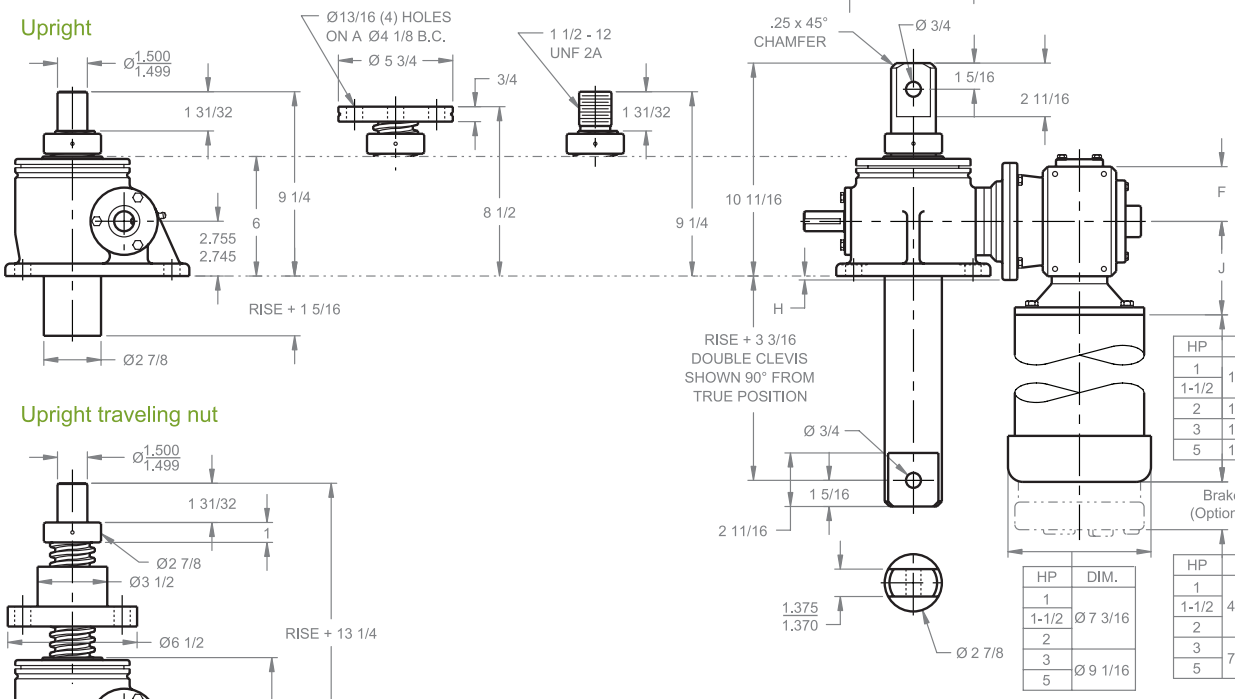

HP	DIM.
1	10 1/4
1-1/2	
2	11 1/4
3	17 3/8
5	18 3/4

HP	DIM.
1	Ø 7 3/16
1-1/2	
2	
3	Ø 9 1/16
5	

HP	DIM.
1	4 9/16
1-1/2	
2	
3	7 9/16
5	

Upright traveling nut

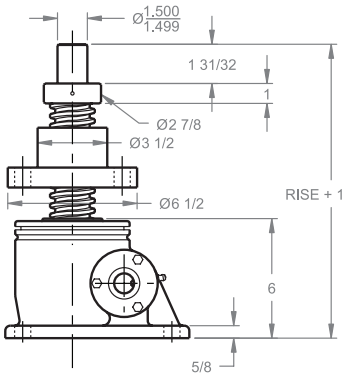

Inverted traveling nut

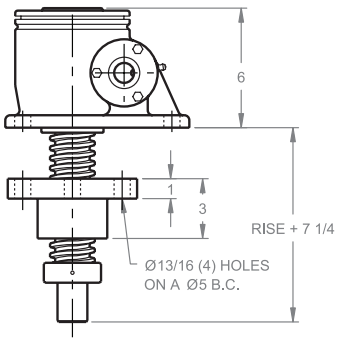

REDUCER DIMENSIONS

HP	1, 1 1/2, 2	3, 5
A	8 11/32	8 29/32
B	11 21/32	13 17/32
C	1 3/4	2 5/8
D	3 3/8	4 7/16
E	8 7/16	11 11/16
F	2 3/4	3 7/8
G	4 15/32	4 15/32
H	0	1 1/8
J	4 11/16	5 3/4
K	3 11/32	4 5/16

Typical Plan View

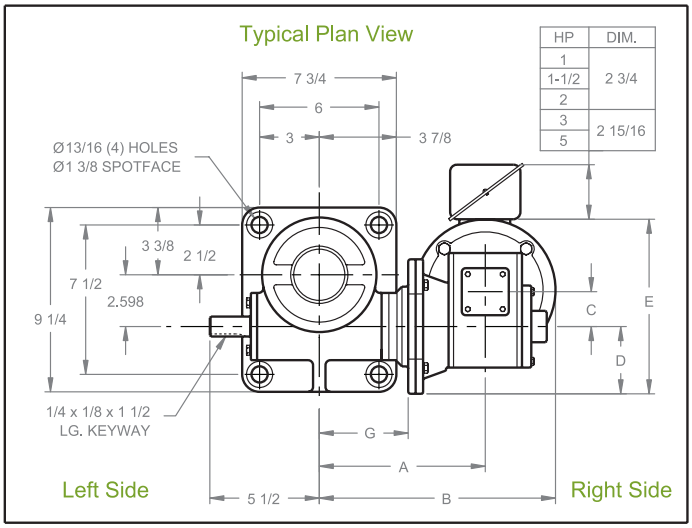

HP	DIM.
1	2 3/4
1-1/2	
2	
3	2 15/16
5	

Inverted

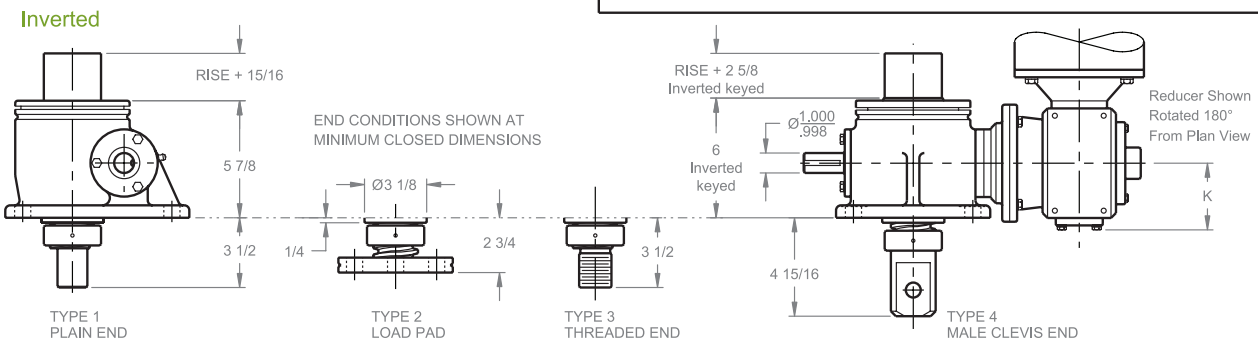

NOTE: FOR LIFTING CAPACITIES SEE PAGE 49

Note: Drawings are artist's conception — not for certification; dimensions are subject to change without notice.

MACHINE SCREW ComDRIVEs®

20 TON - 2 1/2" SCREW

CD 820 / DCD 820
CD 2420 / DCD 2420

Upright

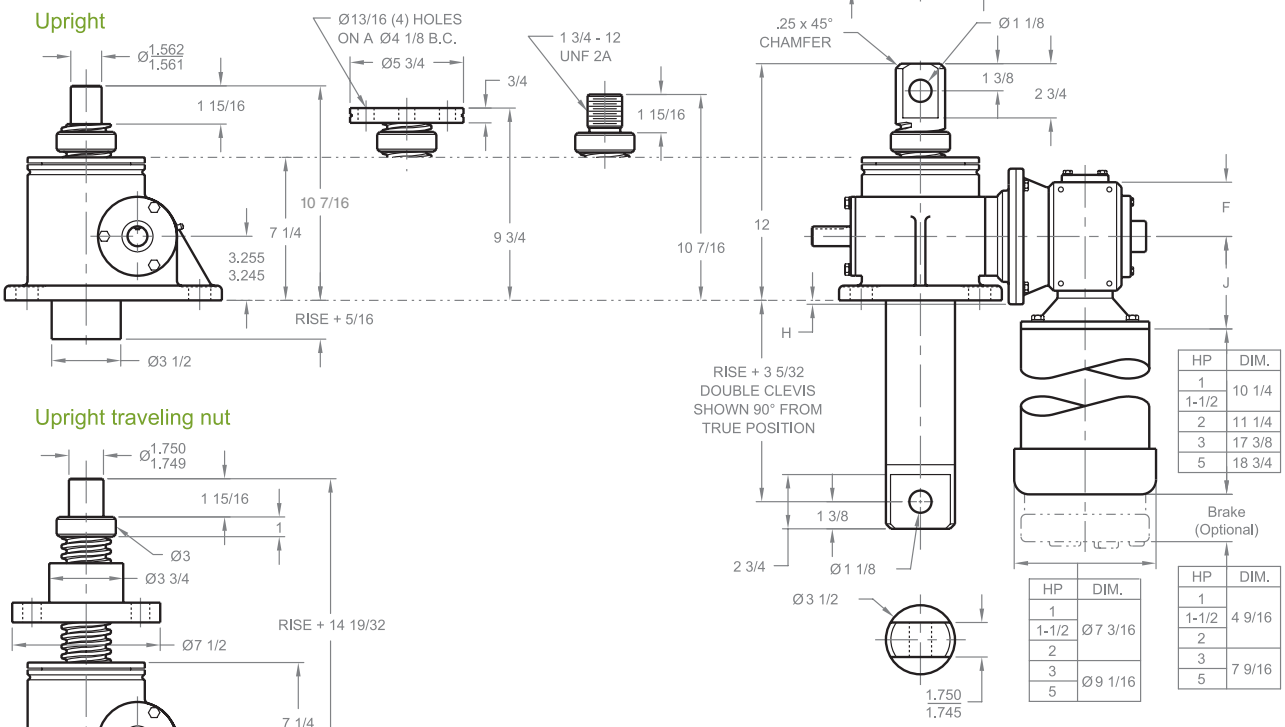

HP	DIM.
1	10 1/4
1-1/2	
2	11 1/4
3	17 3/8
5	18 3/4

HP	DIM.
1	Ø7 3/16
1-1/2	
2	
3	Ø9 1/16
5	

HP	DIM.
1	4 9/16
1-1/2	
2	
3	7 9/16
5	

Upright traveling nut

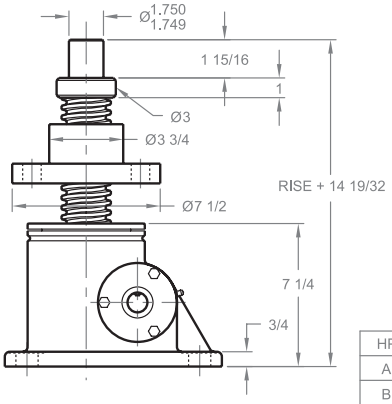

REDUCER DIMENSIONS

HP	1, 1 1/2, 2	3, 5
A	8 11/32	8 29/32
B	11 21/32	13 19/32
C	1 3/4	2 5/8
D	3 3/8	4 7/16
E	8 7/16	11 11/16
F	2 3/4	3 7/8
G	4 15/32	4 15/32
H	0	5/8
J	4 11/16	5 3/4
K	3 11/32	4 5/16

Inverted traveling nut

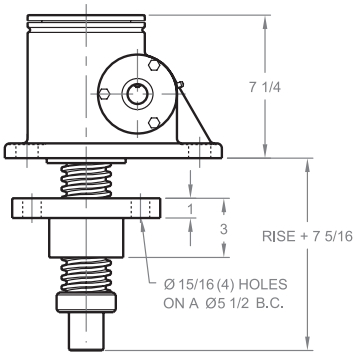

Typical Plan View

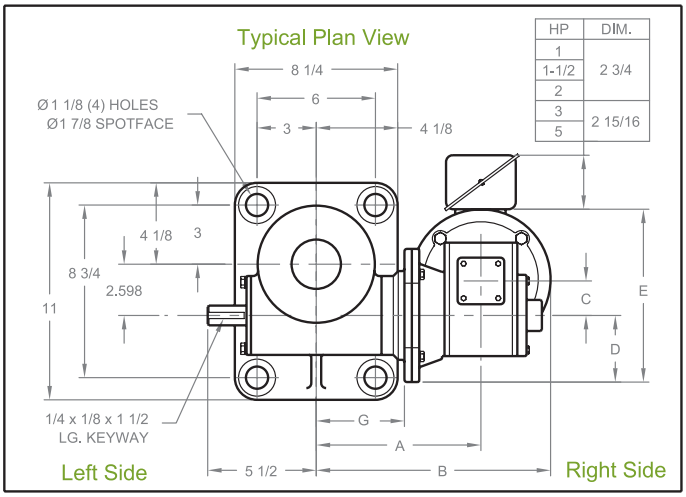

HP	DIM.
1	2 3/4
1-1/2	
2	
3	2 15/16
5	

Inverted

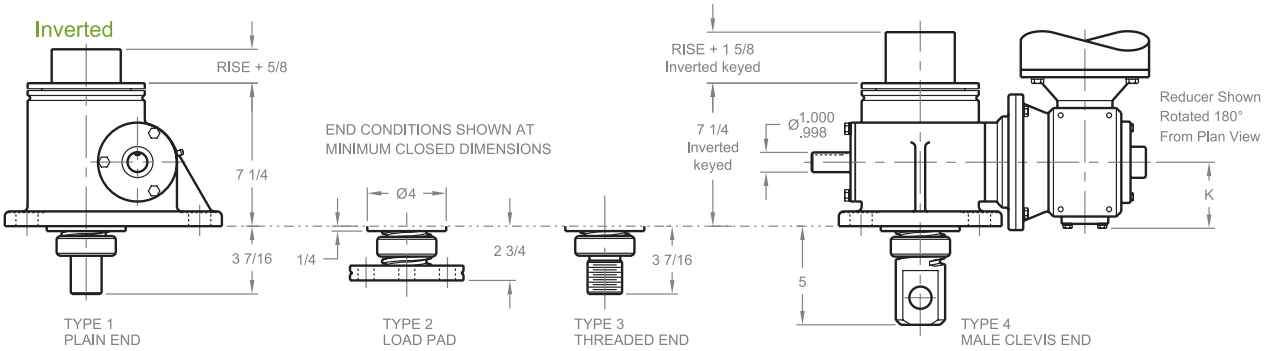

NOTE: FOR LIFTING CAPACITIES SEE PAGE 49

Note: Drawings are artist's conception — not for certification; dimensions are subject to change without notice.

MACHINE SCREW ComDRIVEs®

25 TON - 3 3/8" SCREW

CD 1125 / DCD 1125
CD 3225 / DCD 3225

Upright

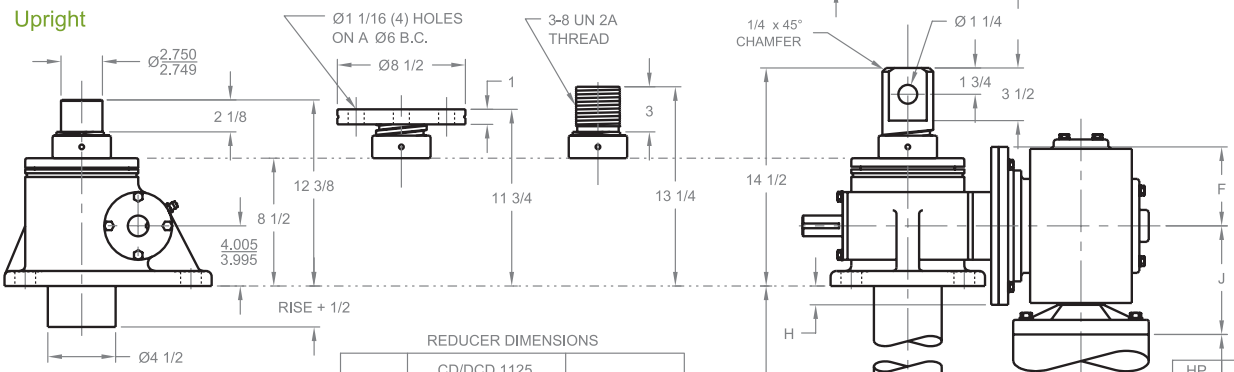

HP	DIM.
3	17 3/8
5	18 3/4
7 1/2	15 13/16
10	16 5/8
15	16 5/8

HP	DIM.
3	Ø9 1/16
5	
7 1/2	Ø10 7/8
10	
15	Ø12 3/8

HP	DIM.
3	7 9/16
5	
7 1/2	8 1/4
10	8 7/8
15	9 1/16

REDUCER DIMENSIONS

MODEL	CD/DCD 1125 CD/DCD 3225				CD/DCD 1125		
RATIO	5:1 10:1	5:1	10:1	5:1	10:1	5:1 10:1	5:1
HP	3	5	5	7 1/2	7 1/2	10	15
A	9 17/32		9 31/32		11 19/32		
B	13 1/32		13 29/32		16 3/32		
C	2 5/8		3 1/4		4 1/4		
D	4 7/16		5 1/2		6 1/2		
E	11 9/16		12 3/4		15 1/4		
F	3 9/16		4 1/2		5 1/4		
G	5 1/2		5 1/2		5 1/2		
H	0		1/2		1 1/4		
J	4 11/16		6 3/4		7 1/4		
K	3 11/32		4 5/16		6 1/8		

Upright traveling nut

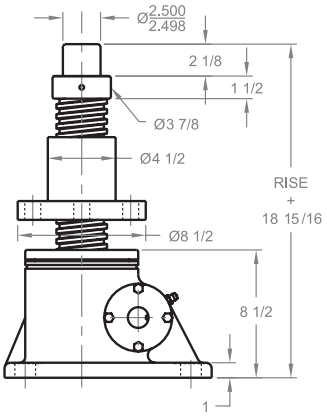

Inverted traveling nut

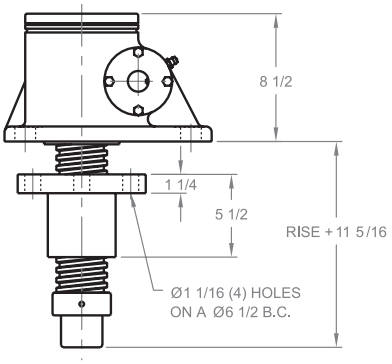

Typical Plan View

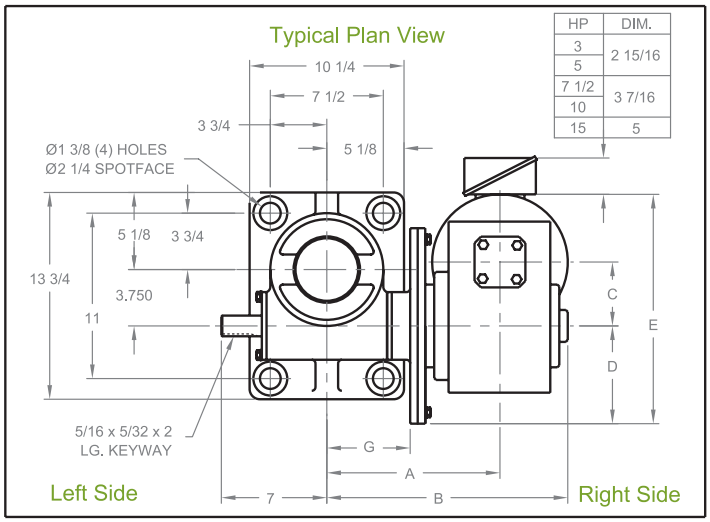

HP	DIM.
3	2 15/16
5	
7 1/2	3 7/16
10	
15	5

Inverted

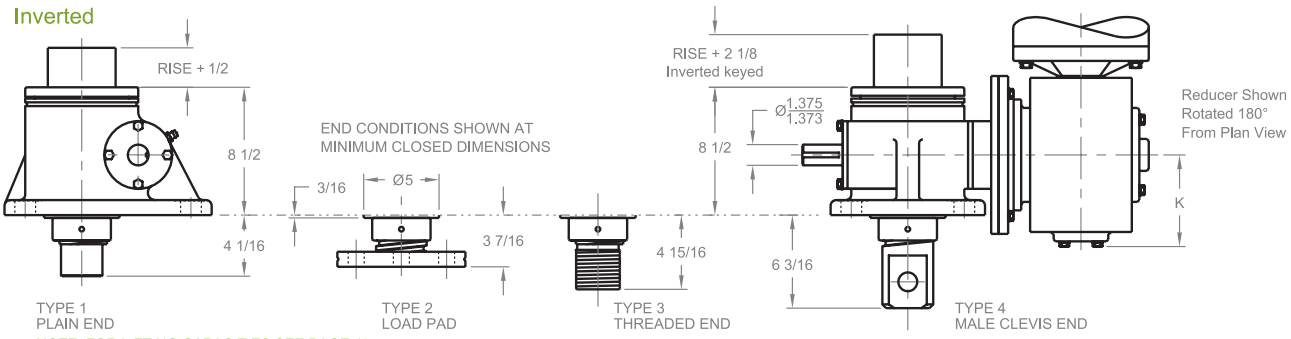

NOTE: FOR LIFTING CAPACITIES SEE PAGE 49

Note: Drawings are artist's conception — not for certification; dimensions are subject to change without notice.

MACHINE SCREW ComDRIVEs®

30 TON - 3 1/2" SCREW

CD 1130 / DCD 1130
CD 3230 / DCD 3230

Upright

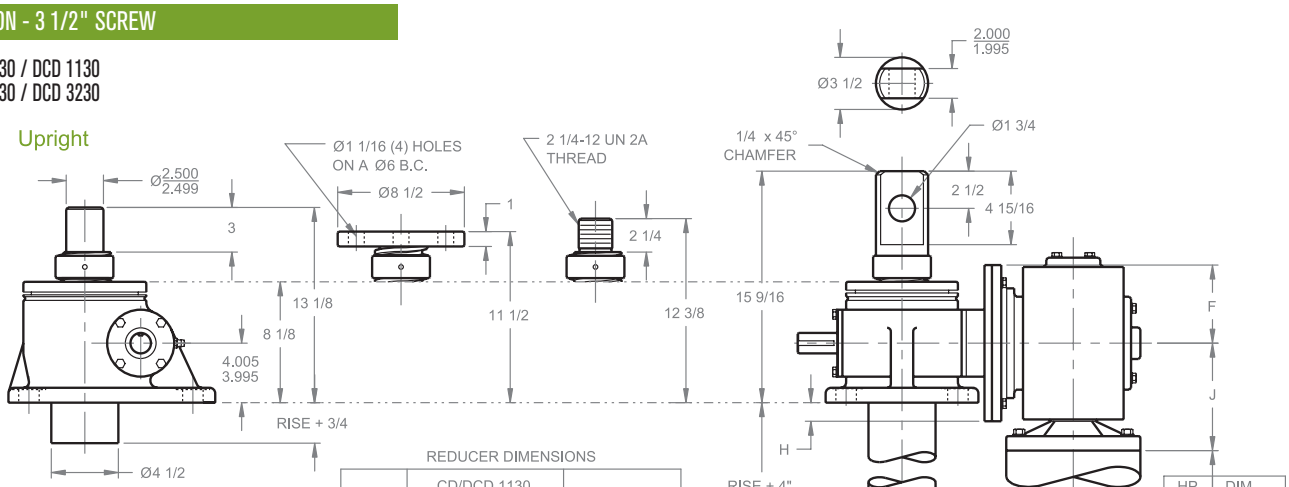

HP	DIM.
3	17 3/8
5	18 3/4
7 1/2	15 13/16
10	16 5/8
15	16 5/8

HP	DIM.
3	Ø9 1/16
5	
7 1/2	Ø10 7/8
10	
15	Ø12 3/8

HP	DIM.
3	7 9/16
5	
7 1/2	8 1/4
10	8 7/8
15	9 1/16

REDUCER DIMENSIONS

MODEL	CD/DCD 1130 CD/DCD 3230				CD/DCD 1130		
RATIO	5:1 10:1	5:1	10:1	5:1	10:1	5:1 10:1	5:1
HP	3	5	5	7 1/2	7 1/2	10	15
A	9 17/32		9 31/32		11 19/32		
B	13 1/32		13 29/32		16 3/32		
C	2 5/8		3 1/4		4 1/4		
D	4 7/16		5 1/2		6 1/2		
E	11 9/16		12 3/4		15 1/4		
F	3 9/16		4 1/2		5 1/4		
G	5 1/2		5 1/2		5 1/2		
H	0		1/2		1 1/4		
J	4 11/16		6 3/4		7 1/4		
K	3 11/32		4 5/16		6 1/8		

Upright traveling nut

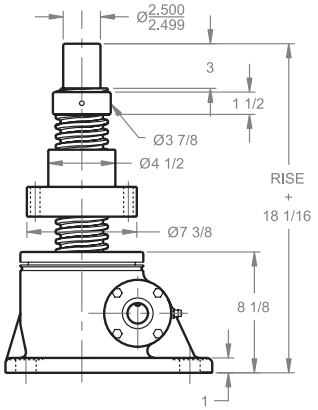

Inverted traveling nut

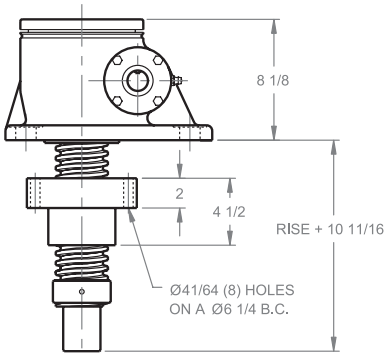

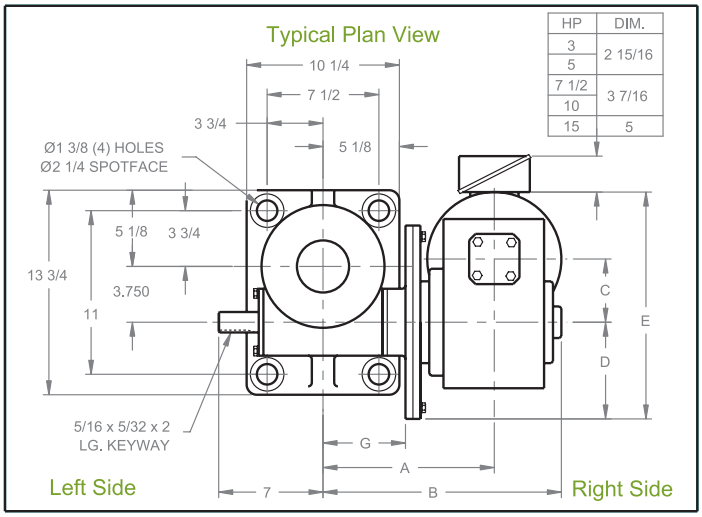

HP	DIM.
3	2 15/16
5	
7 1/2	3 7/16
10	
15	5

Inverted

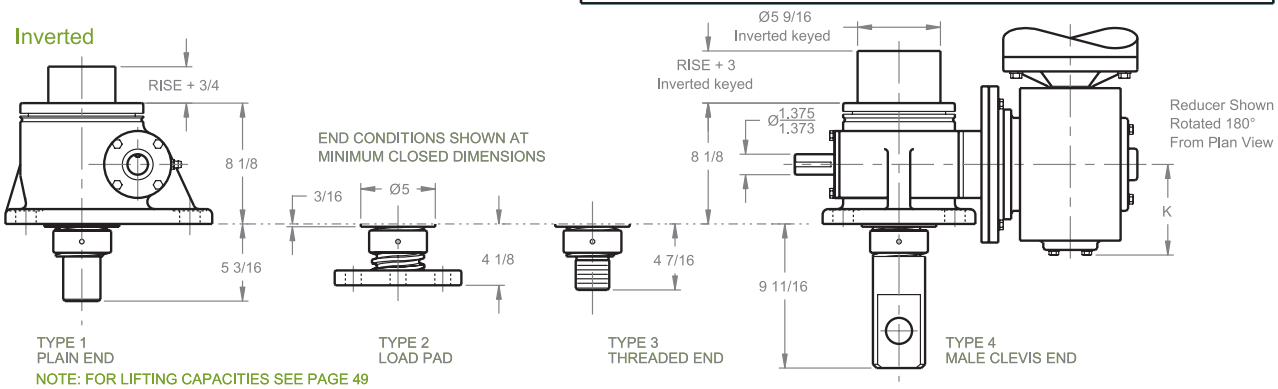

NOTE: FOR LIFTING CAPACITIES SEE PAGE 49

Note: Drawings are artist's conception — not for certification; dimensions are subject to change without notice.